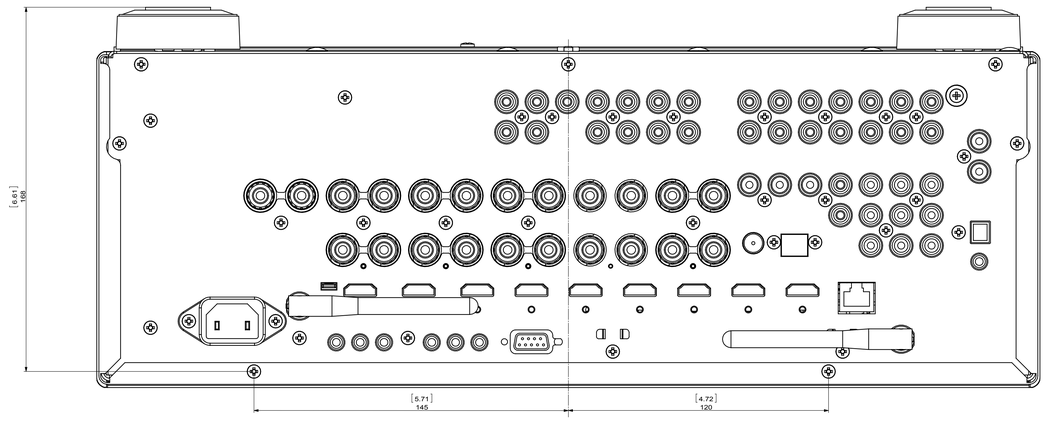
[6.61]
168
[5.71]
145
[4.72]
120

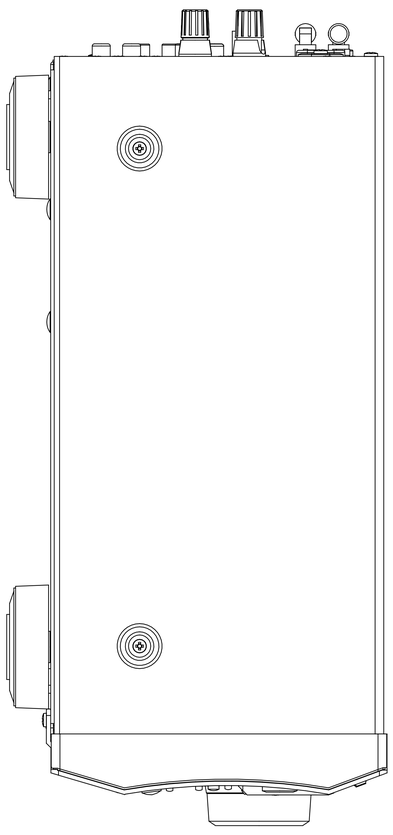

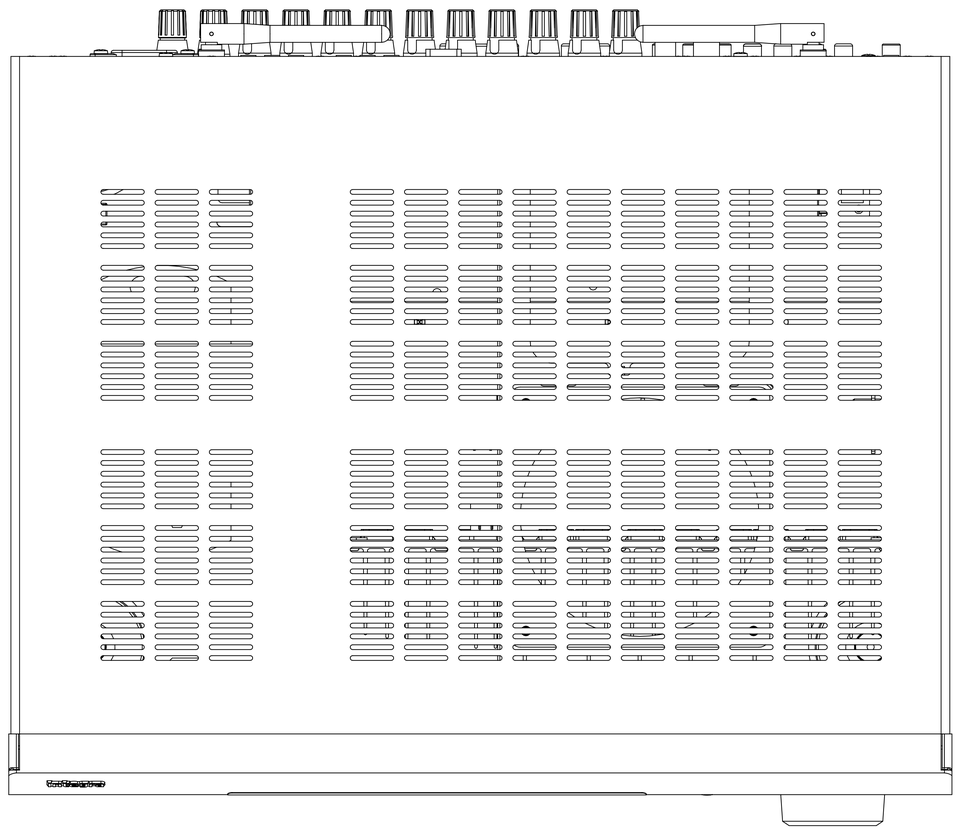

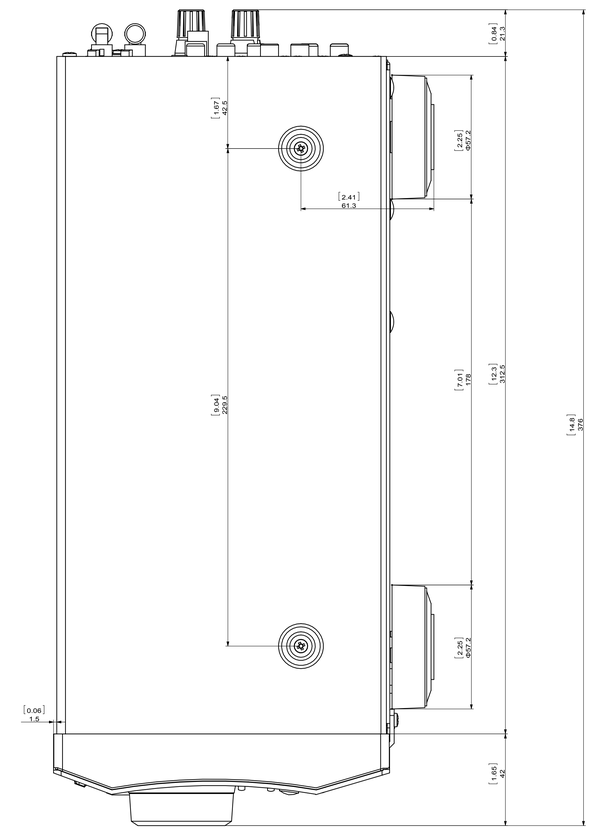
[0.94]
23.8
[1.67]
42.5
[2.25]
Φ57.2
[2.41]
61.3
[9.04]
229.5
[7.01]
178
[12.3]
312.3
[14.8]
376
[2.25]
Φ57.2
[0.06]
1.5
[1.65]
42

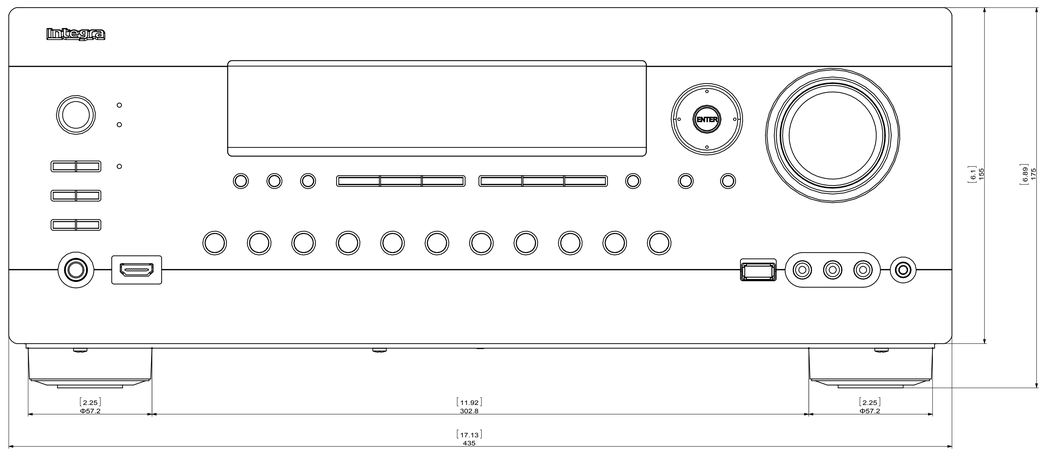
integra
ENTER
[6.1]
155
[6.89]
175
[2.25]
Φ57.2
[11.92]
302.8
[2.25]
Φ57.2
[17.13]
435